PART NUMBER	REFERENCE	MATERIAL	FINISH
013-1683-261	013-1683-262	1	NONE 8

ZONE	REV	ECO	DESCRIPTION	APPR.	DATE
	1A	50809		RJB	12/18/06
	1B	51435		RJB	3/19/08
	1C	54318	REDRAW	RJB	7/23/12

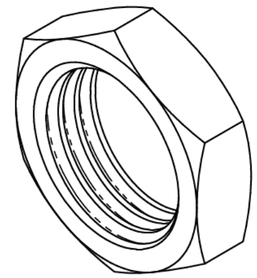

SCALE 7:1

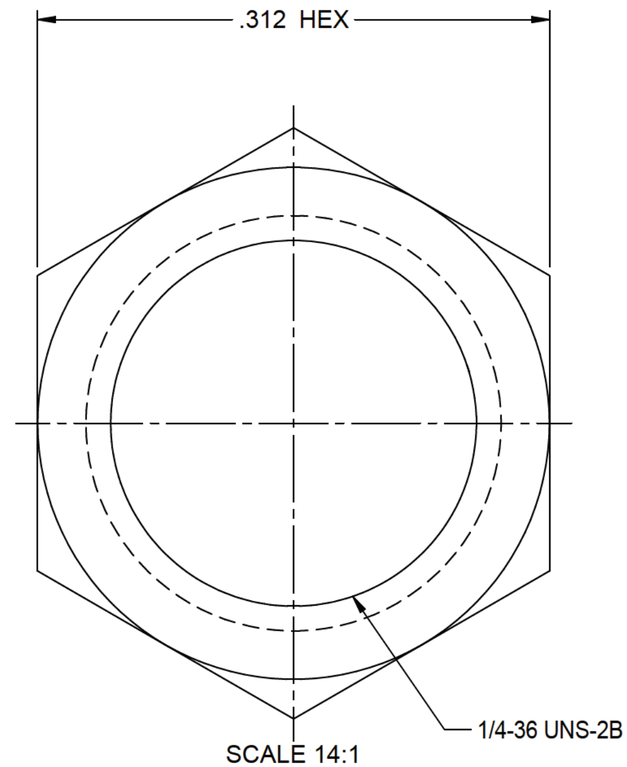

SCALE 14:1

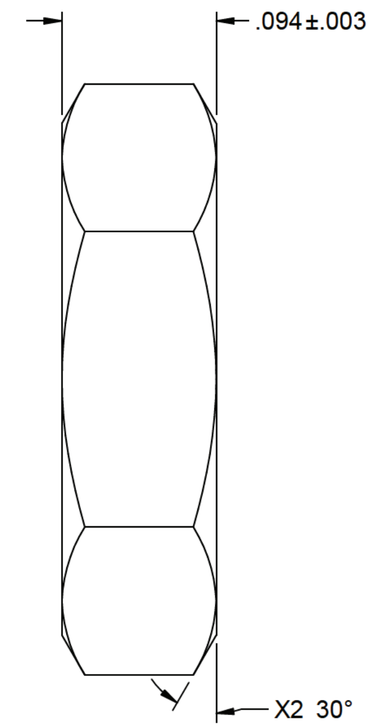

NOTES:

1. MATERIAL: BRASS, CDA 360, 1/2 HARD, PER ASTM B 16, LATEST REVISION.
MATERIAL CERTIFICATION TO BE SUPPLIED WITH EACH SHIPMENT WITH PACKING SLIP.

8. BURRS: NO LOOSE BURRS ALLOWED, SOLID BURRS .003 MAX, CUTOFF BURRS .005 MAX.

9. SHARP CORNERS: .005 MAX X 45^ ALLOWED, UNLESS OTHERWISE SPECIFIED.

10. ANGLES: X^±2^, UNLESS OTHERWISE SPECIFIED.

11. ALL DIMENSIONS APPLY AFTER PLATING, UNLESS OTHERWISE SPECIFIED.

12. PARTS MUST MEET 1.33 CpK OR GREATER FOR ALL DIMENSIONS PER SPC MANUAL 003-3351-300/310. STATISTICAL DATA FOR EACH FLAGGED DIMENSION TO BE SUPPLIED WITH EACH SHIPMENT WITH PACKING SLIP.

[redacted]

Model No. 013-1683-261/270

[redacted]

RoHS ✓ 2002/95/EC

Cage Code 34078

3RD ANGLE PROJECTION

UNLESS OTHERWISE SPECIFIED
UNITS: INCHES
.XX ±.01
.XXX ±.003
.XXXX ±.0010
ANGLES ±1°00'

Drawn by RJB — Date 1-19-01

Approved by RJB — Date 3-30-01

Title: MOUNTING NUT

Material:

Drawing No. 013-1683-261/270

Rev. 1C

Finish:

Size C — DO NOT SCALE DRAWING — Scale 14:1 — Sheet 1 of 1